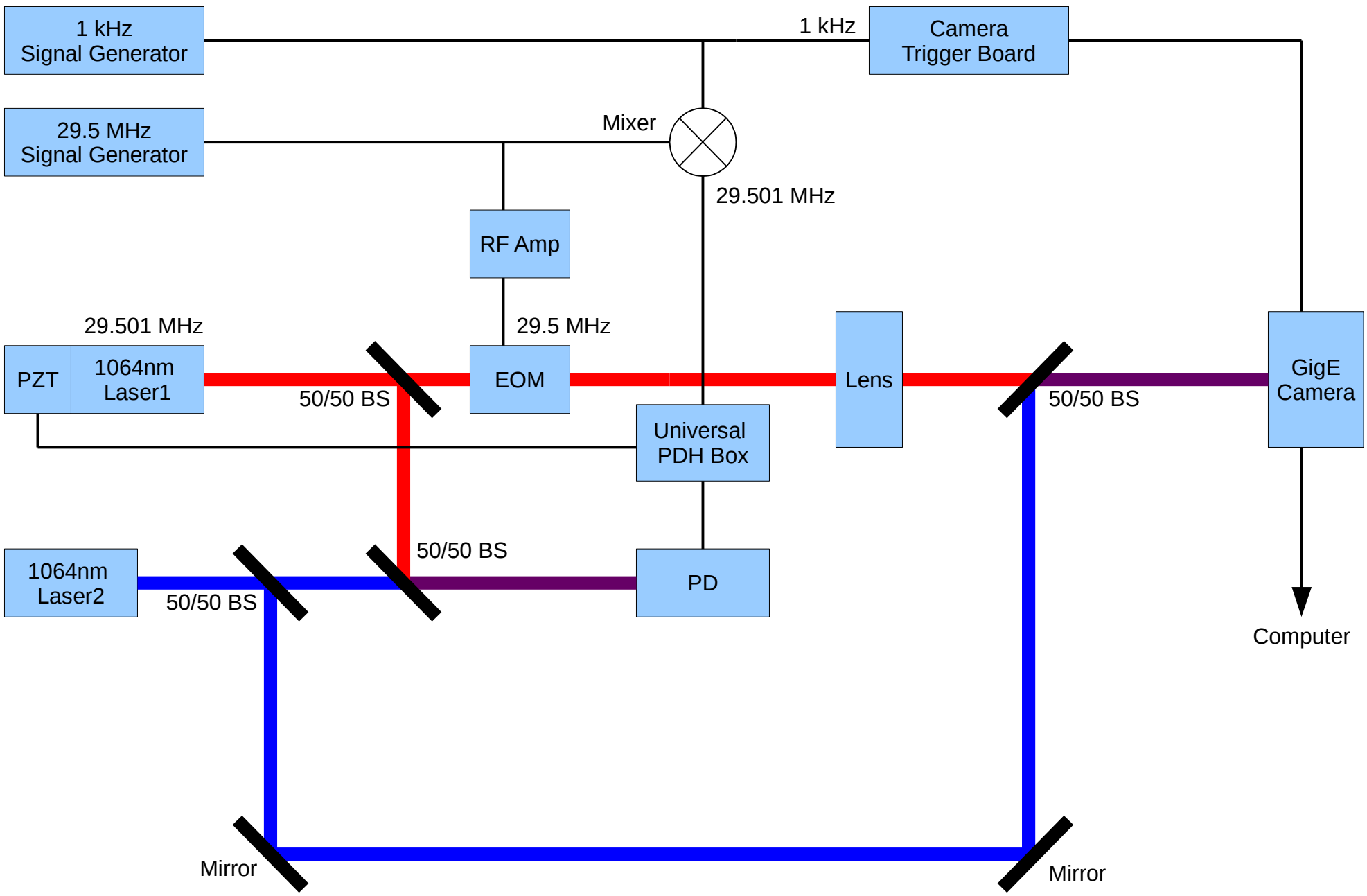
1 kHz
Signal Generator
1 kHz
Camera
Trigger Board
29.5 MHz
Signal Generator
Mixer
29.501 MHz
RF Amp
29.501 MHz
29.5 MHz
PZT
1064nm
Laser1
50/50 BS
EOM
Lens
50/50 BS
GigE
Camera
Universal
PDH Box
1064nm
Laser2
50/50 BS
50/50 BS
PD
Computer
Mirror
Mirror