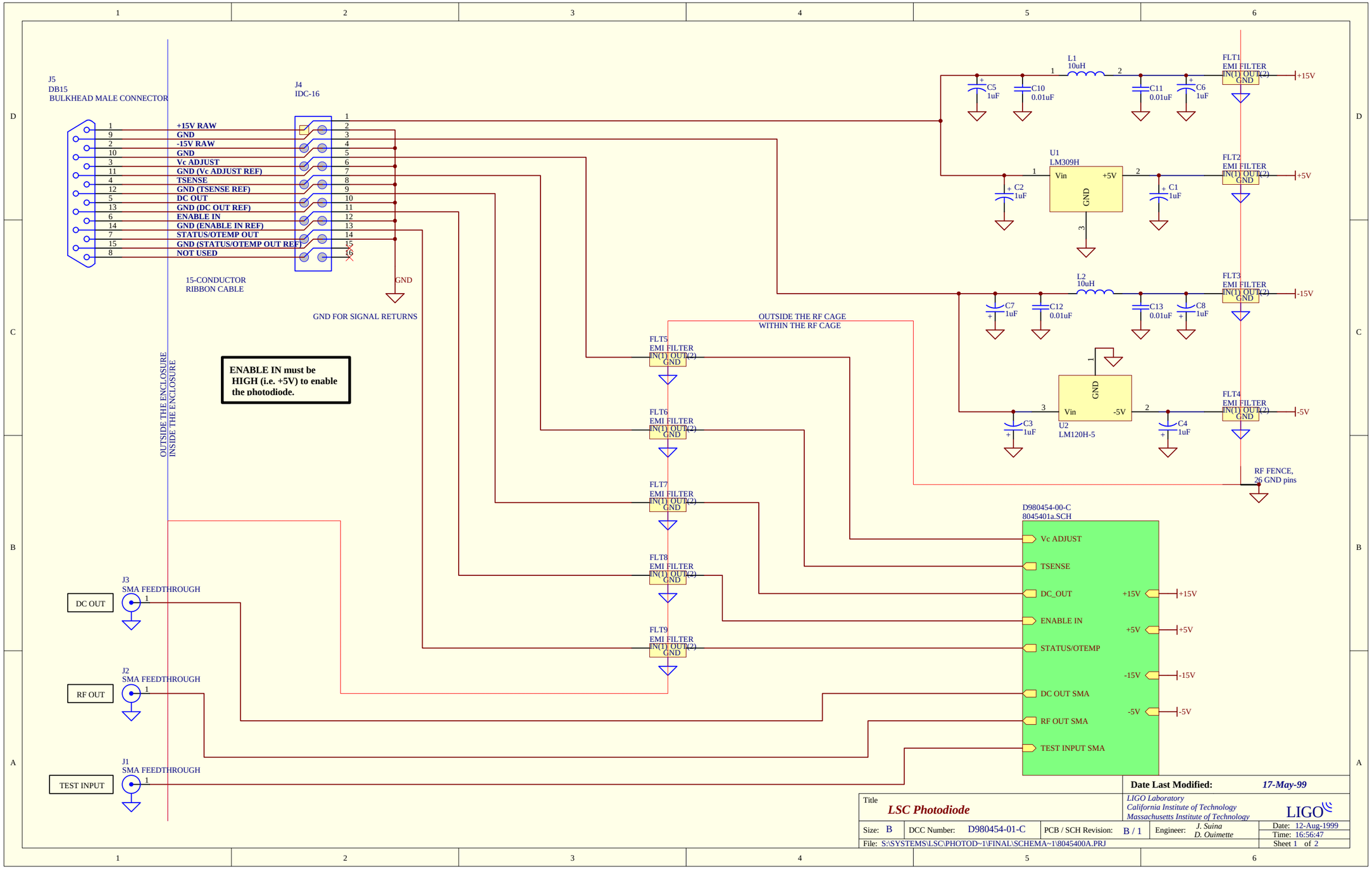


| | | | | |
|---|---|---|---|---|
| Title: *LSC Photodiode* | | | Date Last Modified: *17-May-99* | |
| | | | *LIGO Laboratory*<br>*California Institute of Technology*<br>*Massachusetts Institute of Technology* | LIGO |
| Size: B | DCC Number: D980454-01-C | PCB / SCH Revision: B / 1 | Engineer: *J. Suina*<br>*D. Ouimette* | Date: 12-Aug-1999<br>Time: 16:56:47 |
| File: S:\SYSTEMS\LSC\PHOTOD~1\FINAL\SCHEMA~1\8045400A.PRJ | | | | Sheet 1 of 2 |

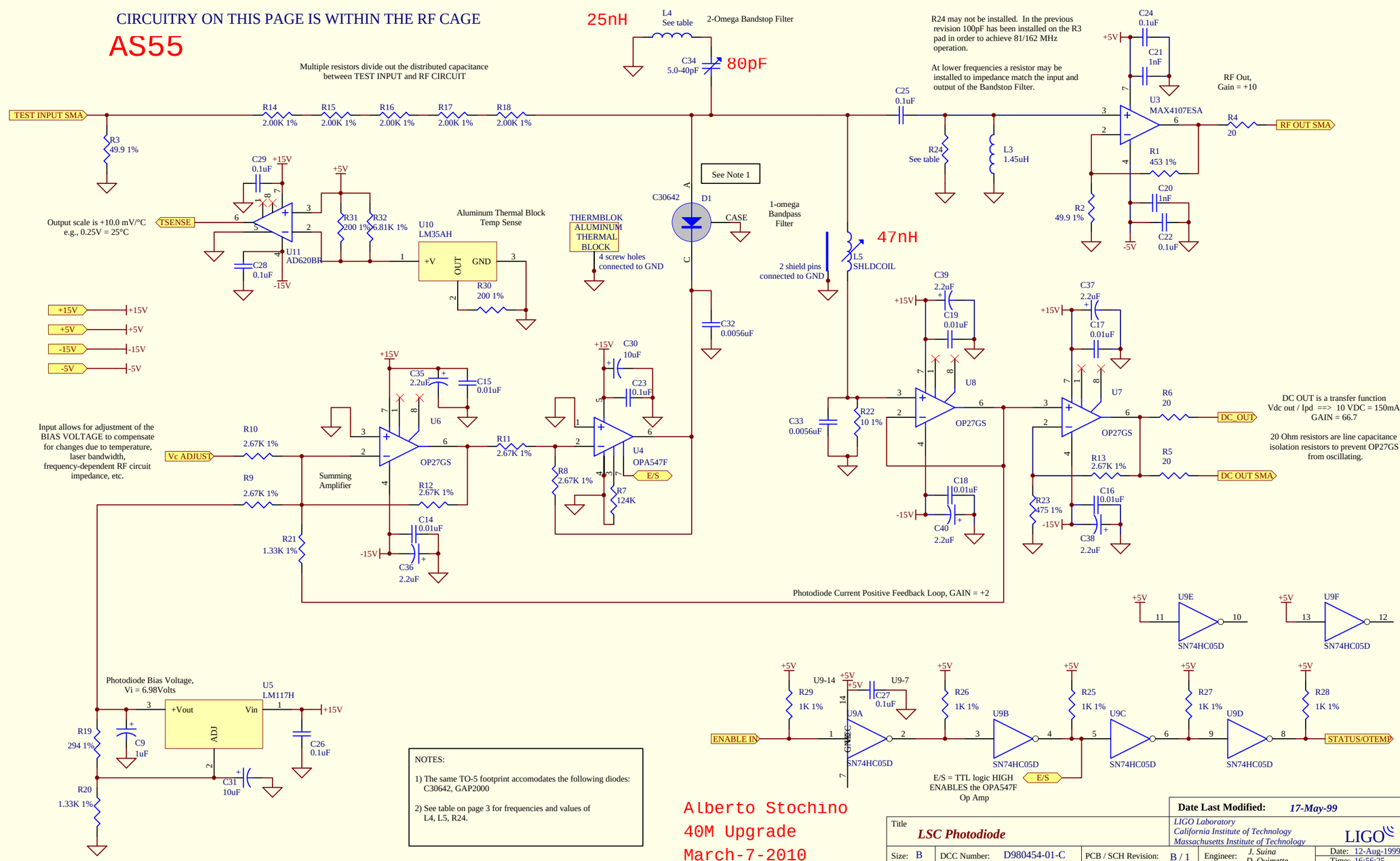
CIRCUITRY ON THIS PAGE IS WITHIN THE RF CAGE
AS55
Multiple resistors divide out the distributed capacitance between TEST INPUT and RF CIRCUIT
TEST INPUT SMA
R3 49.9 1%
R14 2.00K 1%
R15 2.00K 1%
R16 2.00K 1%
R17 2.00K 1%
R18 2.00K 1%
25nH
L4 See table
2-Omega Bandstop Filter
C34 5.0-40pF
80pF
R24 may not be installed. In the previous revision 100pF has been installed on the R3 pad in order to achieve 81/162 MHz operation.
At lower frequencies a resistor may be installed to impedance match the input and output of the Bandstop Filter.
C24 0.1uF
C21 1nF
RF Out, Gain = +10
U3 MAX4107ESA
R4 20
RF OUT SMA
C25 0.1uF
R24 See table
L3 1.45uH
R1 453 1%
C20 1nF
C22 0.1uF
R2 49.9 1%
See Note 1
C30642
D1
CASE
1-omega Bandpass Filter
47nH
L5 SHLDCOIL
2 shield pins connected to GND
C32 0.0056uF
Output scale is +10.0 mV/°C e.g., 0.25V = 25°C
TSENSE
C29 0.1uF
C28 0.1uF
U11 AD620BR
R31 200 1%
R32 6.81K 1%
U10 LM35AH
Aluminum Thermal Block Temp Sense
R30 200 1%
THERMBLOK ALUMINUM THERMAL BLOCK
4 screw holes connected to GND
+15V
+5V
-15V
-5V
C35 2.2uF
C15 0.01uF
U6
OP27GS
Input allows for adjustment of the BIAS VOLTAGE to compensate for changes due to temperature, laser bandwidth, frequency-dependent RF circuit impedance, etc.
Vc ADJUST
R10 2.67K 1%
R9 2.67K 1%
Summing Amplifier
R12 2.67K 1%
R11 2.67K 1%
C14 0.01uF
C36 2.2uF
R21 1.33K 1%
C30 10uF
C23 0.1uF
U4 OPA547F
E/S
R8 2.67K 1%
R7 124K
C39 2.2uF
C19 0.01uF
U8
OP27GS
C33 0.0056uF
R22 10 1%
C18 0.01uF
C40 2.2uF
C37 2.2uF
C17 0.01uF
U7
OP27GS
R6 20
DC_OUT
R5 20
DC OUT SMA
R13 2.67K 1%
C16 0.01uF
C38 2.2uF
R23 475 1%
DC OUT is a transfer function
Vdc out / Ipd ==> 10 VDC = 150mA
GAIN = 66.7
20 Ohm resistors are line capacitance isolation resistors to prevent OP27GS from oscillating.
Photodiode Current Positive Feedback Loop, GAIN = +2
U9E
U9F
SN74HC05D
Photodiode Bias Voltage, Vi = 6.98Volts
U5 LM117H
+Vout
Vin
ADJ
R19 294 1%
C9 1uF
C26 0.1uF
C31 10uF
R20 1.33K 1%
ENABLE IN
R29 1K 1%
U9-14
U9-7
C27 0.1uF
U9A
R26 1K 1%
U9B
R25 1K 1%
U9C
R27 1K 1%
U9D
R28 1K 1%
STATUS/OTEMP
E/S = TTL logic HIGH ENABLES the OPA547F Op Amp
NOTES:
1) The same TO-5 footprint accomodates the following diodes: C30642, GAP2000
2) See table on page 3 for frequencies and values of L4, L5, R24.
Alberto Stochino
40M Upgrade
March-7-2010
Date Last Modified: 17-May-99
Title LSC Photodiode
LIGO Laboratory
California Institute of Technology
Massachusetts Institute of Technology
LIGO
Size: B
DCC Number: D980454-01-C
PCB / SCH Revision: B / 1
Engineer: J. Suina D. Ouimette
Date: 12-Aug-1999
Time: 16:56:25
Sheet 2 of 2
File: S:\SYSTEMS\LSC\PHOTOD~1\FINAL\SCHEMA~1\8045401A.SCH