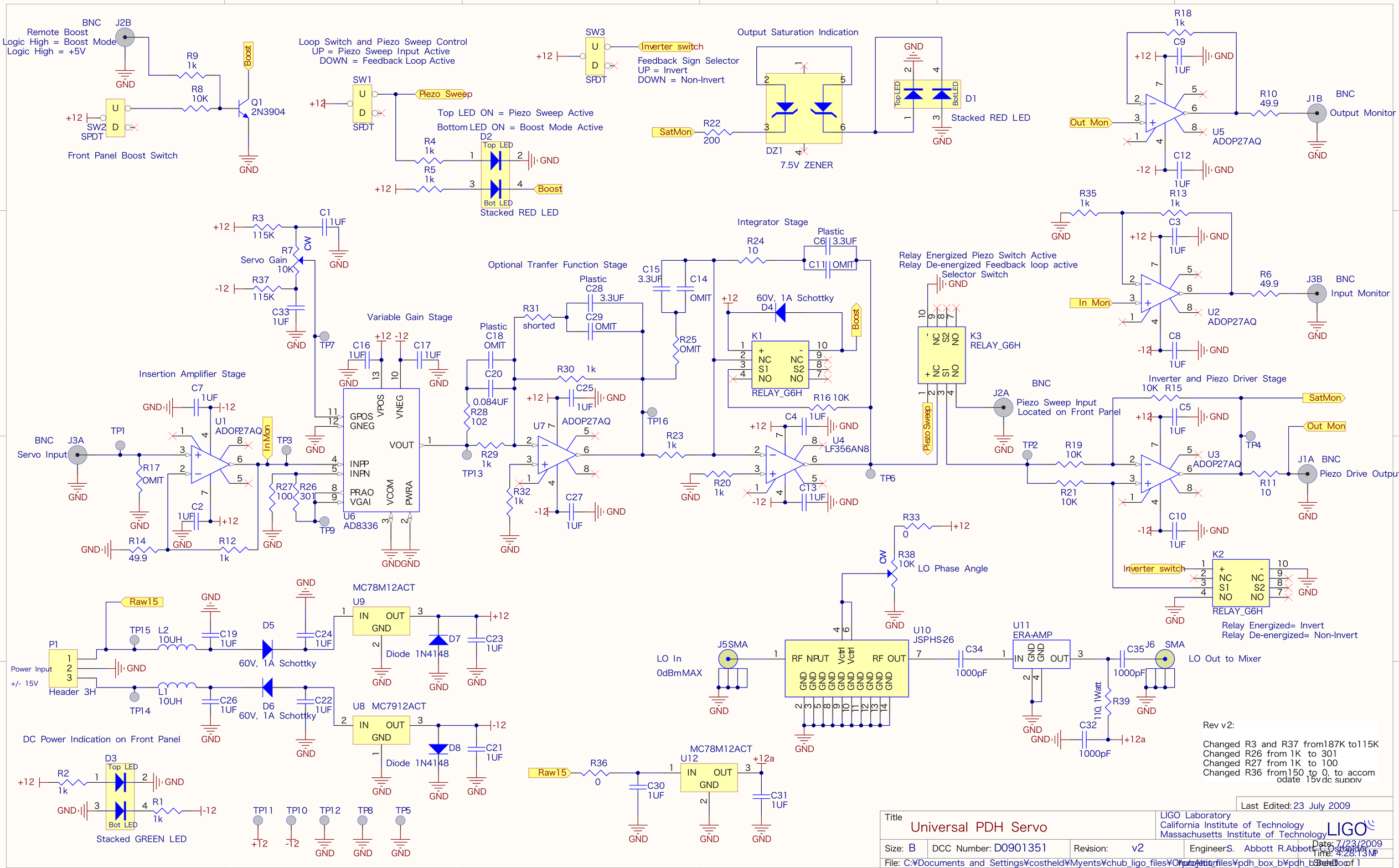
BNC J2B
Remote Boost
Logic High = Boost Mode
Logic High = +5V
R9 1k
R8 10K
Q1 2N3904
Boost
SW2 SPDT
Front Panel Boost Switch
Loop Switch and Piezo Sweep Control
UP = Piezo Sweep Input Active
DOWN = Feedback Loop Active
SW1 SPDT
Piezo Sweep
Top LED ON = Piezo Sweep Active
Bottom LED ON = Boost Mode Active
R4 1k
R5 1k
D2 Top LED Bot LED
Stacked RED LED
SW3 SPDT
Inverter switch
Feedback Sign Selector
UP = Invert
DOWN = Non-Invert
Output Saturation Indication
SatMon
R22 200
DZ1 7.5V ZENER
D1 Top LED Bot LED
Stacked RED LED
R18 1k
C9 1UF
R10 49.9
J1B BNC
Output Monitor
Out Mon
U5 ADOP27AQ
C12 1UF
R35 1k
R13 1k
C3 1UF
R6 49.9
J3B BNC
Input Monitor
In Mon
U2 ADOP27AQ
C8 1UF
R3 115K
C1 1UF
R7 Servo Gain 10K
CW
R37 115K
C33 1UF
TP7
Integrator Stage
R24 10
C6 3.3UF Plastic
C11 OMIT
C15 3.3UF
C14 OMIT
R25 OMIT
60V, 1A Schottky D4
K1 RELAY_G6H
Relay Energized Piezo Switch Active
Relay De-energized Feedback loop active
Selector Switch
K3 RELAY_G6H
Optional Tranfer Function Stage
R31 shorted
C28 3.3UF Plastic
C29 OMIT
Variable Gain Stage
C16 1UF
C17 1UF
C18 OMIT Plastic
C20 0.084UF
R28 102
R29 1k
TP13
R30 1k
C25 1UF
U7 ADOP27AQ
R32 1k
C27 1UF
TP16
R23 1k
R16 10K
C4 1UF
U4 LF356AN8
R20 1k
C13 1UF
TP6
Insertion Amplifier Stage
C7 1UF
U1 ADOP27AQ
BNC J3A
Servo Input
TP1
R17 OMIT
C2 1UF
R14 49.9
R12 1k
TP3
R27 100
R26 301
TP9
U6 AD8336
GPOS GNEG VPOS VNEG VOUT INPP INPN PRAO VGAI VCOM PWRA
BNC J2A
Piezo Sweep Input
Located on Front Panel
TP2
R19 10K
R21 10K
Inverter and Piezo Driver Stage
R15 10K
C5 1UF
U3 ADOP27AQ
TP4
J1A BNC
Piezo Drive Output
R11 10
C10 1UF
K2 RELAY_G6H
Relay Energized= Invert
Relay De-energized= Non-Invert
R33 0
R38 10K
LO Phase Angle
LO In
0dBmMAX
J5 SMA
U10 JSPHS-26
RF INPUT Vctrl Vctrl RF OUT
C34 1000pF
U11 ERA-AMP
C35 1000pF
J6 SMA
LO Out to Mixer
R39 110, 1Watt
C32 1000pF
+12a
Raw15
P1
Power Input
+/- 15V
Header 3H
TP15
L2 10UH
L1 10UH
TP14
C19 1UF
C26 1UF
D5 60V, 1A Schottky
D6 60V, 1A Schottky
C24 1UF
C22 1UF
MC78M12ACT U9
U8 MC7912ACT
D7 Diode 1N4148
D8 Diode 1N4148
C23 1UF
C21 1UF
DC Power Indication on Front Panel
D3 Top LED Bot LED
R2 1k
R1 1k
Stacked GREEN LED
TP11 TP10 TP12 TP8 TP5
R36 0
C30 1UF
U12 MC78M12ACT
C31 1UF
Rev v2:
Changed R3 and R37 from187K to115K
Changed R26 from 1K to 301
Changed R27 from 1K to 100
Changed R36 from150 to 0, to accom odate 15vdc supply
Last Edited: 23 July 2009
Title
Universal PDH Servo
LIGO Laboratory
California Institute of Technology
Massachusetts Institute of Technology
LIGO
Size: B
DCC Number: D0901351
Revision: v2
Engineer S. Abbott R.Abbott C. Ostheller
Date: 7/23/2009
Time: 4:28:13 PM
Sheet 1 of 1
File: C:¥Documents and Settings¥costheld¥Myents¥chub_ligo_files¥Controlfiles¥pdh_box_b¥pdh_box.sch

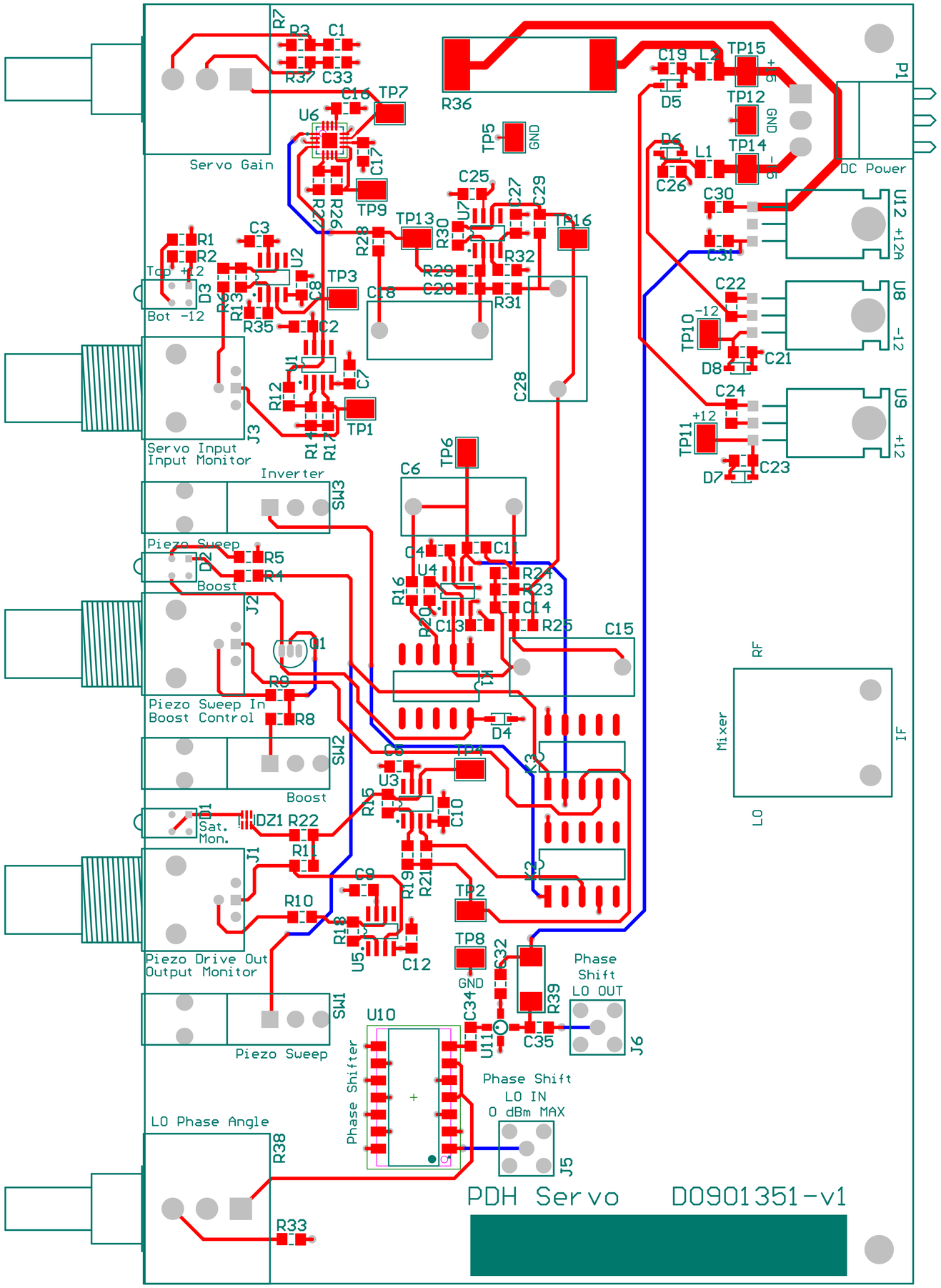
Servo Gain
Top +12
Bot -12
Servo Input
Input Monitor
Inverter
Piezo Sweep
Boost
Piezo Sweep In
Boost Control
Boost
Sat.
Mon.
Piezo Drive Out
Output Monitor
Piezo Sweep
LO Phase Angle
Phase Shifter
Phase Shift
LO IN
0 dBm MAX
Phase
Shift
LO OUT
Mixer
RF
IF
LO
DC Power
PDH Servo D0901351-v1